H2 Wiring Diagram

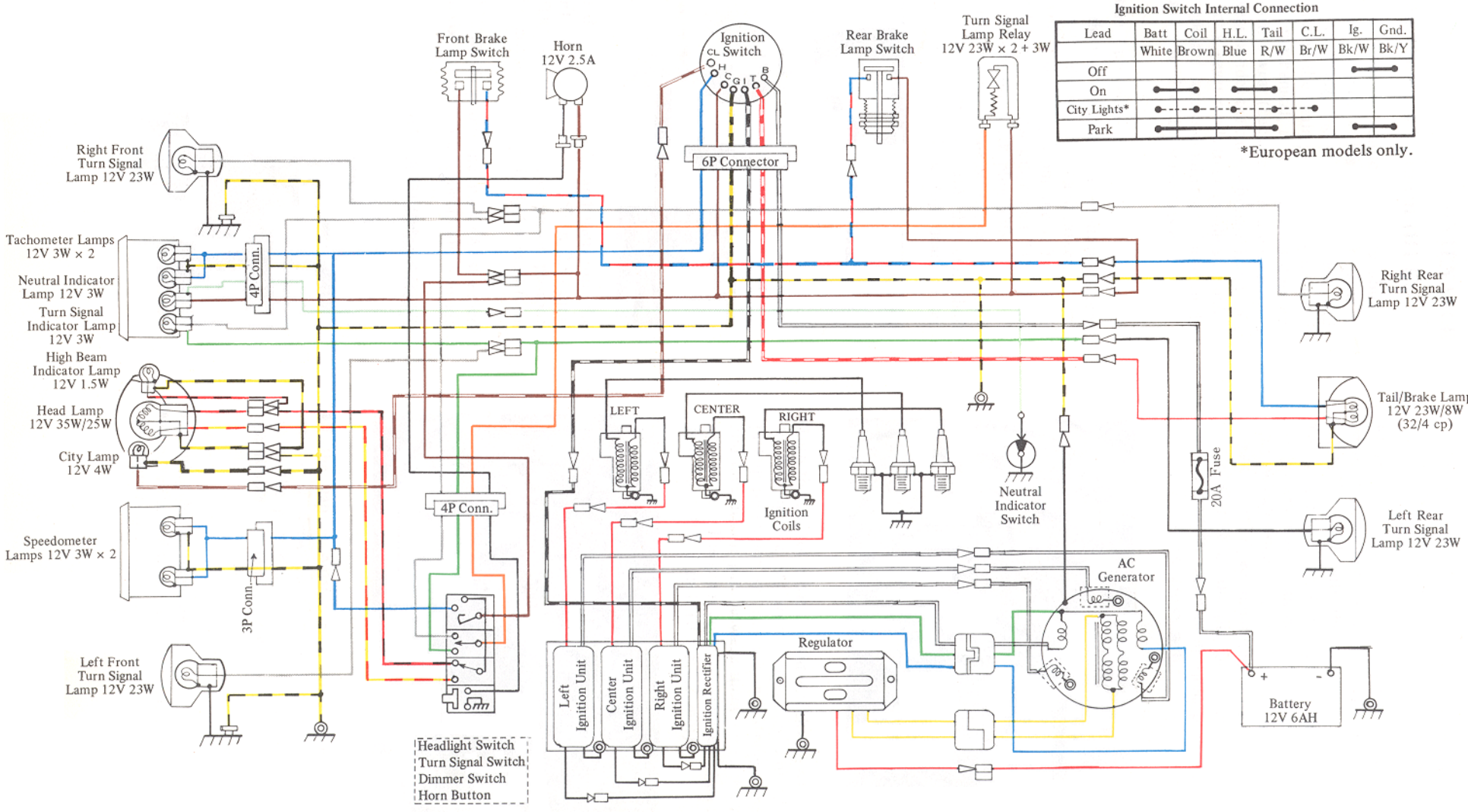

Ignition Switch Internal Connection

Lead	Batt	Coil	H.L.	Tail	C.L.	Ig.	Gnd.
	White	Brown	Blue	R/W	Br/W	Bk/W	Bk/Y
Off						●	●
On	●	●	●	●			
City Lights*	●	●	●	●	●		
Park	●	●	●	●		●	●

*European models only.